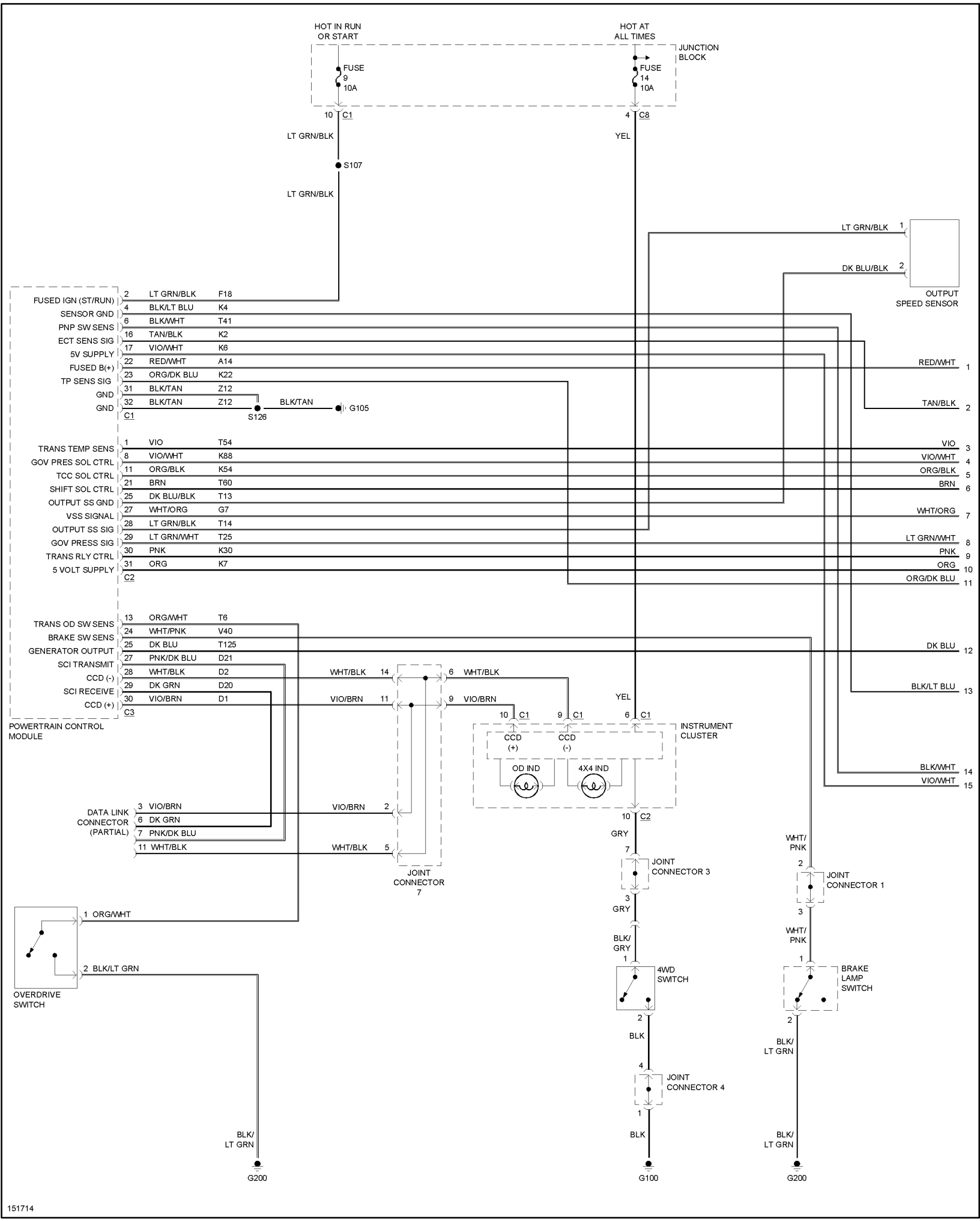
HOT IN RUN OR START
HOT AT ALL TIMES
JUNCTION BLOCK
FUSE 9 10A
FUSE 14 10A
10 C1
4 C8
LT GRN/BLK
YEL
S107
LT GRN/BLK
LT GRN/BLK 1
DK BLU/BLK 2
OUTPUT SPEED SENSOR
FUSED IGN (ST/RUN) 2 LT GRN/BLK F18
SENSOR GND 4 BLK/LT BLU K4
PNP SW SENS 6 BLK/WHT T41
ECT SENS SIG 16 TAN/BLK K2
5V SUPPLY 17 VIO/WHT K6
FUSED B(+) 22 RED/WHT A14
TP SENS SIG 23 ORG/DK BLU K22
GND 31 BLK/TAN Z12
GND 32 BLK/TAN Z12
C1
BLK/TAN
S126
G105
RED/WHT 1
TAN/BLK 2
TRANS TEMP SENS 1 VIO T54
GOV PRES SOL CTRL 8 VIO/WHT K88
TCC SOL CTRL 11 ORG/BLK K54
SHIFT SOL CTRL 21 BRN T60
OUTPUT SS GND 25 DK BLU/BLK T13
VSS SIGNAL 27 WHT/ORG G7
OUTPUT SS SIG 28 LT GRN/BLK T14
GOV PRESS SIG 29 LT GRN/WHT T25
TRANS RLY CTRL 30 PNK K30
5 VOLT SUPPLY 31 ORG K7
C2
VIO 3
VIO/WHT 4
ORG/BLK 5
BRN 6
WHT/ORG 7
LT GRN/WHT 8
PNK 9
ORG 10
ORG/DK BLU 11
TRANS OD SW SENS 13 ORG/WHT T6
BRAKE SW SENS 24 WHT/PNK V40
GENERATOR OUTPUT 25 DK BLU T125
SCI TRANSMIT 27 PNK/DK BLU D21
CCD (-) 28 WHT/BLK D2
SCI RECEIVE 29 DK GRN D20
CCD (+) 30 VIO/BRN D1
C3
POWERTRAIN CONTROL MODULE
DK BLU 12
BLK/LT BLU 13
WHT/BLK 14
VIO/BRN 11
6 WHT/BLK
9 VIO/BRN
YEL
10 C1
9 C1
6 C1
INSTRUMENT CLUSTER
CCD (+)
CCD (-)
OD IND
4X4 IND
BLK/WHT 14
VIO/WHT 15
DATA LINK CONNECTOR (PARTIAL)
3 VIO/BRN
6 DK GRN
7 PNK/DK BLU
11 WHT/BLK
VIO/BRN 2
WHT/BLK 5
JOINT CONNECTOR 7
10 C2
GRY
7
JOINT CONNECTOR 3
3
GRY
BLK/ GRY
1
4WD SWITCH
2
BLK
4
JOINT CONNECTOR 4
1
BLK
G100
WHT/ PNK
2
JOINT CONNECTOR 1
3
WHT/ PNK
1
BRAKE LAMP SWITCH
2
BLK/ LT GRN
BLK/ LT GRN
G200
1 ORG/WHT
2 BLK/LT GRN
OVERDRIVE SWITCH
BLK/ LT GRN
G200
151714