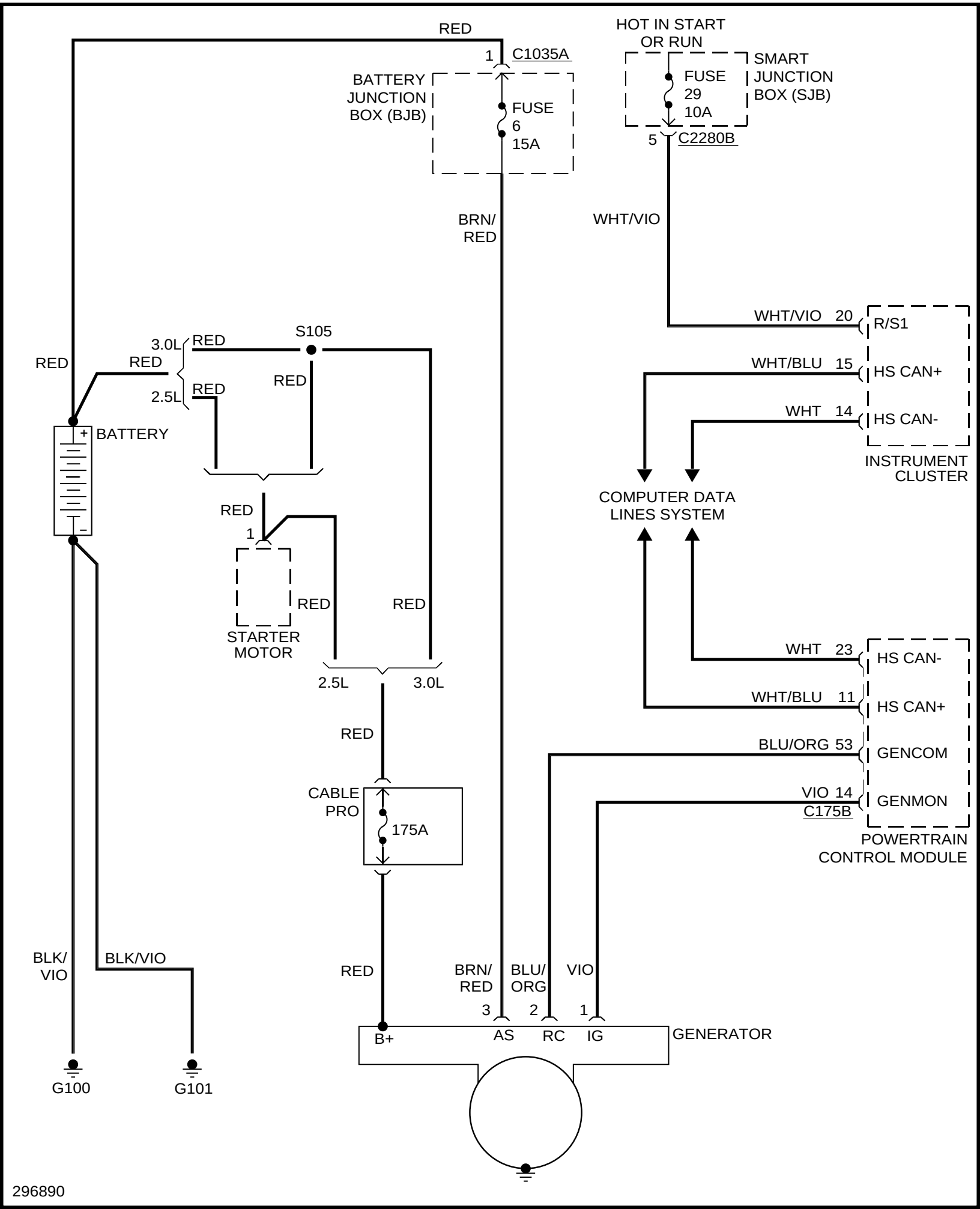
RED
1
C1035A
BATTERY JUNCTION BOX (BJB)
FUSE 6 15A
HOT IN START OR RUN
FUSE 29 10A
SMART JUNCTION BOX (SJB)
5
C2280B
BRN/ RED
WHT/VIO
WHT/VIO 20
R/S1
WHT/BLU 15
HS CAN+
WHT 14
HS CAN-
INSTRUMENT CLUSTER
COMPUTER DATA LINES SYSTEM
S105
3.0L
RED
RED
RED
2.5L
RED
BATTERY
+
-
RED
1
STARTER MOTOR
RED
RED
2.5L
3.0L
RED
WHT 23
HS CAN-
WHT/BLU 11
HS CAN+
BLU/ORG 53
GENCOM
VIO 14
GENMON
C175B
POWERTRAIN CONTROL MODULE
CABLE PRO
175A
BLK/ VIO
BLK/VIO
RED
BRN/ RED
BLU/ ORG
VIO
3
2
1
B+
AS
RC
IG
GENERATOR
G100
G101
296890