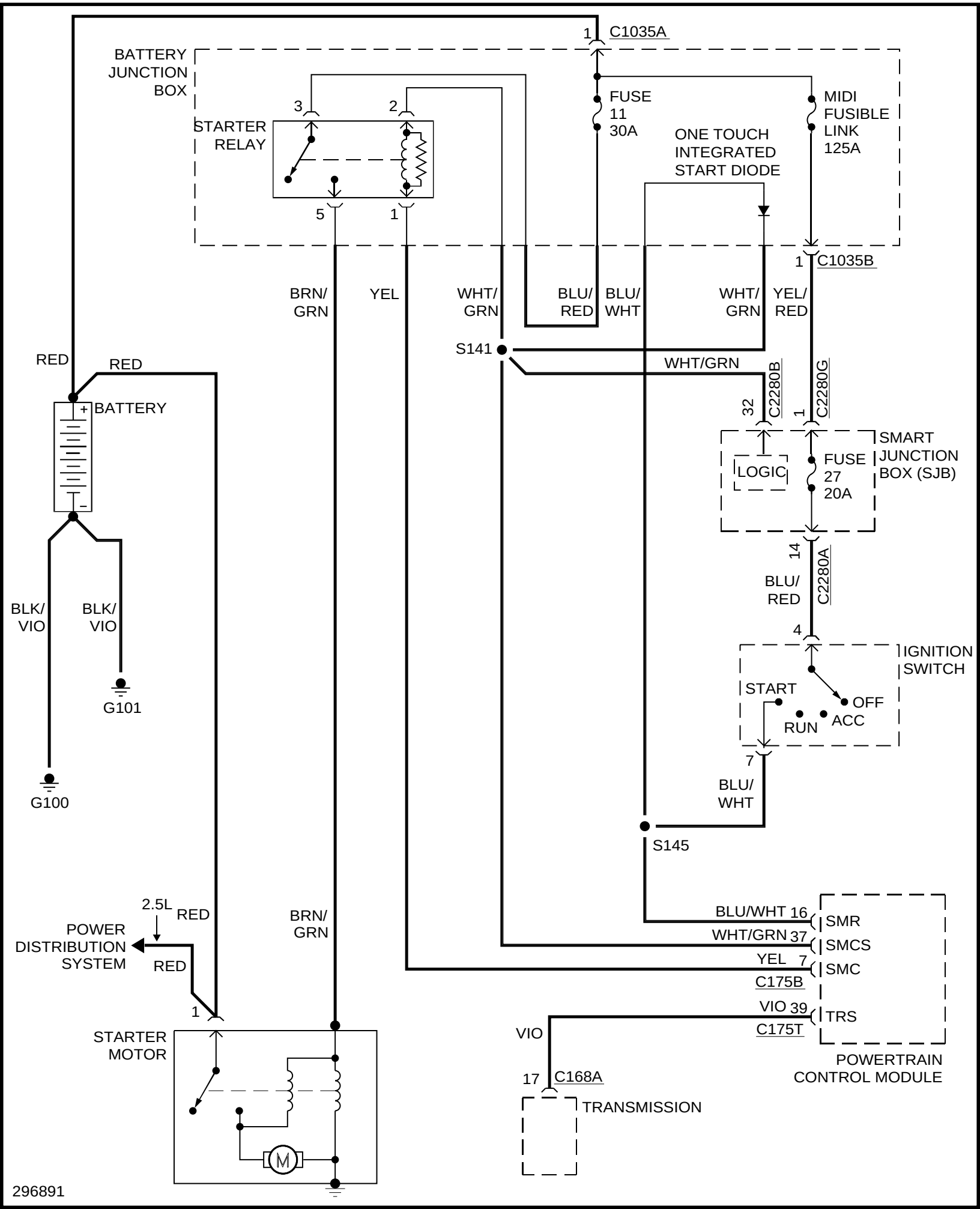
BATTERY JUNCTION BOX
C1035A
1
STARTER RELAY
3
2
5
1
FUSE 11 30A
MIDI FUSIBLE LINK 125A
ONE TOUCH INTEGRATED START DIODE
C1035B
BRN/ GRN
YEL
WHT/ GRN
BLU/ RED
BLU/ WHT
WHT/ GRN
YEL/ RED
S141
WHT/GRN
RED
RED
BATTERY
C2280B
C2280G
32
1
SMART JUNCTION BOX (SJB)
LOGIC
FUSE 27 20A
14
C2280A
BLU/ RED
4
BLK/ VIO
BLK/ VIO
G101
IGNITION SWITCH
START
OFF
RUN
ACC
7
G100
BLU/ WHT
S145
2.5L
RED
POWER DISTRIBUTION SYSTEM
RED
BRN/ GRN
BLU/WHT 16
SMR
WHT/GRN 37
SMCS
YEL 7
SMC
C175B
1
VIO 39
TRS
C175T
STARTER MOTOR
VIO
POWERTRAIN CONTROL MODULE
17
C168A
TRANSMISSION
M
296891