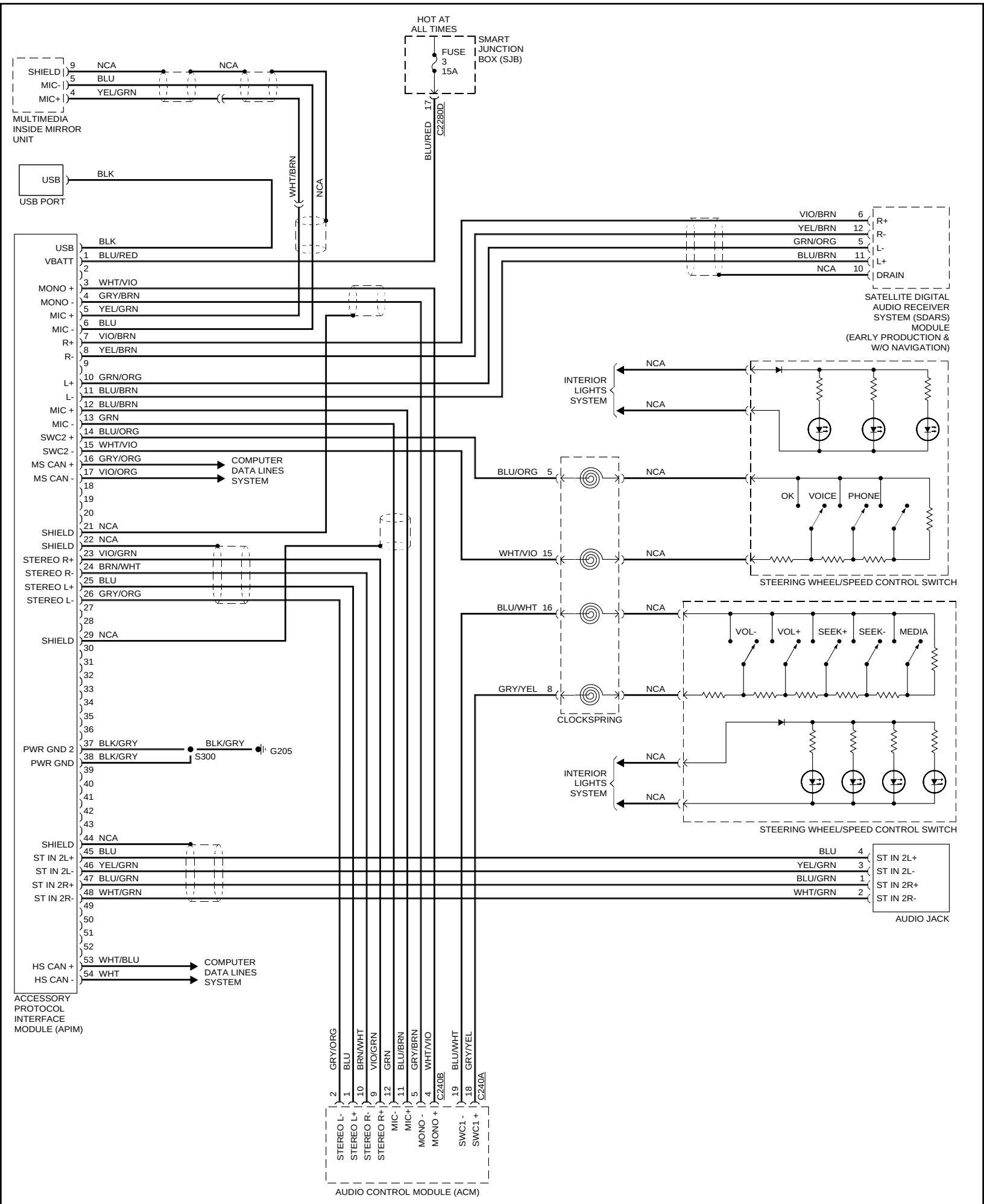
HOT AT ALL TIMES
FUSE 3 15A
SMART JUNCTION BOX (SJB)
BLU/RED 17 C2280D
MULTIMEDIA INSIDE MIRROR UNIT
SHIELD 9 NCA
MIC- 5 BLU
MIC+ 4 YEL/GRN
USB PORT
USB BLK
WHT/BRN
NCA
VBATT 1 BLU/RED
MONO + 3 WHT/VIO
MONO - 4 GRY/BRN
MIC + 5 YEL/GRN
MIC - 6 BLU
R+ 7 VIO/BRN
R- 8 YEL/BRN
L+ 10 GRN/ORG
L- 11 BLU/BRN
MIC + 12 BLU/BRN
MIC - 13 GRN
SWC2 + 14 BLU/ORG
SWC2 - 15 WHT/VIO
MS CAN + 16 GRY/ORG
MS CAN - 17 VIO/ORG
COMPUTER DATA LINES SYSTEM
SHIELD 21 NCA
SHIELD 22 NCA
STEREO R+ 23 VIO/GRN
STEREO R- 24 BRN/WHT
STEREO L+ 25 BLU
STEREO L- 26 GRY/ORG
SHIELD 29 NCA
PWR GND 2 37 BLK/GRY
PWR GND 38 BLK/GRY
S300
BLK/GRY
G205
SHIELD 44 NCA
ST IN 2L+ 45 BLU
ST IN 2L- 46 YEL/GRN
ST IN 2R+ 47 BLU/GRN
ST IN 2R- 48 WHT/GRN
HS CAN + 53 WHT/BLU
HS CAN - 54 WHT
COMPUTER DATA LINES SYSTEM
ACCESSORY PROTOCOL INTERFACE MODULE (APIM)
VIO/BRN 6 R+
YEL/BRN 12 R-
GRN/ORG 5 L-
BLU/BRN 11 L+
NCA 10 DRAIN
SATELLITE DIGITAL AUDIO RECEIVER SYSTEM (SDARS) MODULE (EARLY PRODUCTION & W/O NAVIGATION)
INTERIOR LIGHTS SYSTEM
NCA
NCA
BLU/ORG 5
WHT/VIO 15
BLU/WHT 16
GRY/YEL 8
CLOCKSPRING
OK
VOICE
PHONE
STEERING WHEEL/SPEED CONTROL SWITCH
VOL-
VOL+
SEEK+
SEEK-
MEDIA
STEERING WHEEL/SPEED CONTROL SWITCH
INTERIOR LIGHTS SYSTEM
BLU 4 ST IN 2L+
YEL/GRN 3 ST IN 2L-
BLU/GRN 1 ST IN 2R+
WHT/GRN 2 ST IN 2R-
AUDIO JACK
2 GRY/ORG STEREO L-
1 BLU STEREO L+
10 BRN/WHT STEREO R-
9 VIO/GRN STEREO R+
12 GRN MIC-
11 BLU/BRN MIC+
5 GRY/BRN MONO -
4 WHT/VIO MONO +
C240B
19 BLU/WHT SWC1 -
18 GRY/YEL SWC1 +
C240A
AUDIO CONTROL MODULE (ACM)

297712