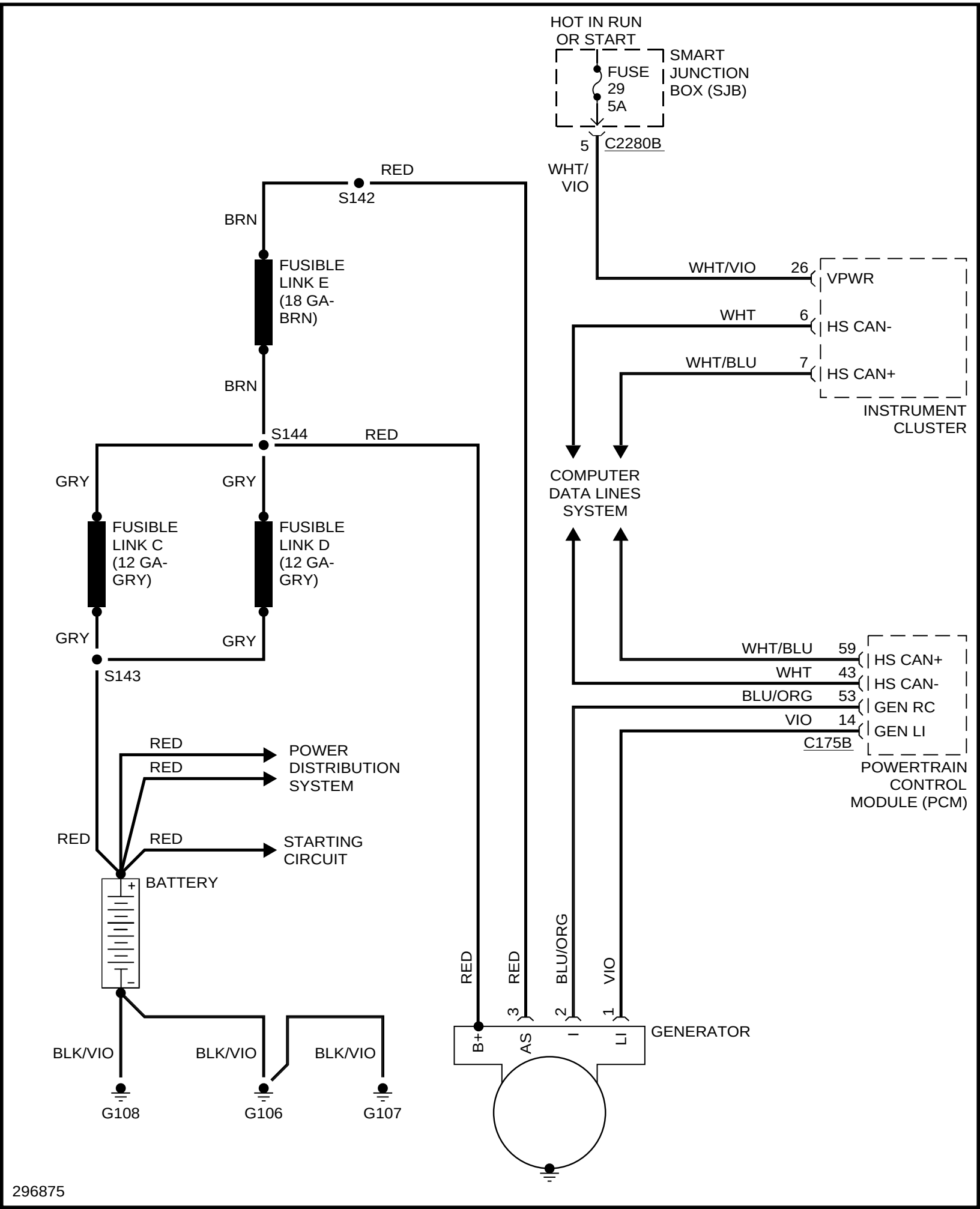
HOT IN RUN
OR START
FUSE
29
5A
SMART
JUNCTION
BOX (SJB)
5
C2280B
WHT/
VIO
RED
S142
BRN
FUSIBLE
LINK E
(18 GA-
BRN)
BRN
S144
RED
GRY
GRY
FUSIBLE
LINK C
(12 GA-
GRY)
FUSIBLE
LINK D
(12 GA-
GRY)
GRY
GRY
S143
RED
RED
POWER
DISTRIBUTION
SYSTEM
RED
RED
STARTING
CIRCUIT
BATTERY
BLK/VIO
BLK/VIO
BLK/VIO
G108
G106
G107
WHT/VIO
26
VPWR
WHT
6
HS CAN-
WHT/BLU
7
HS CAN+
INSTRUMENT
CLUSTER
COMPUTER
DATA LINES
SYSTEM
WHT/BLU
59
HS CAN+
WHT
43
HS CAN-
BLU/ORG
53
GEN RC
VIO
14
GEN LI
C175B
POWERTRAIN
CONTROL
MODULE (PCM)
RED
RED
BLU/ORG
VIO
3
2
1
B+
AS
I
LI
GENERATOR

296875