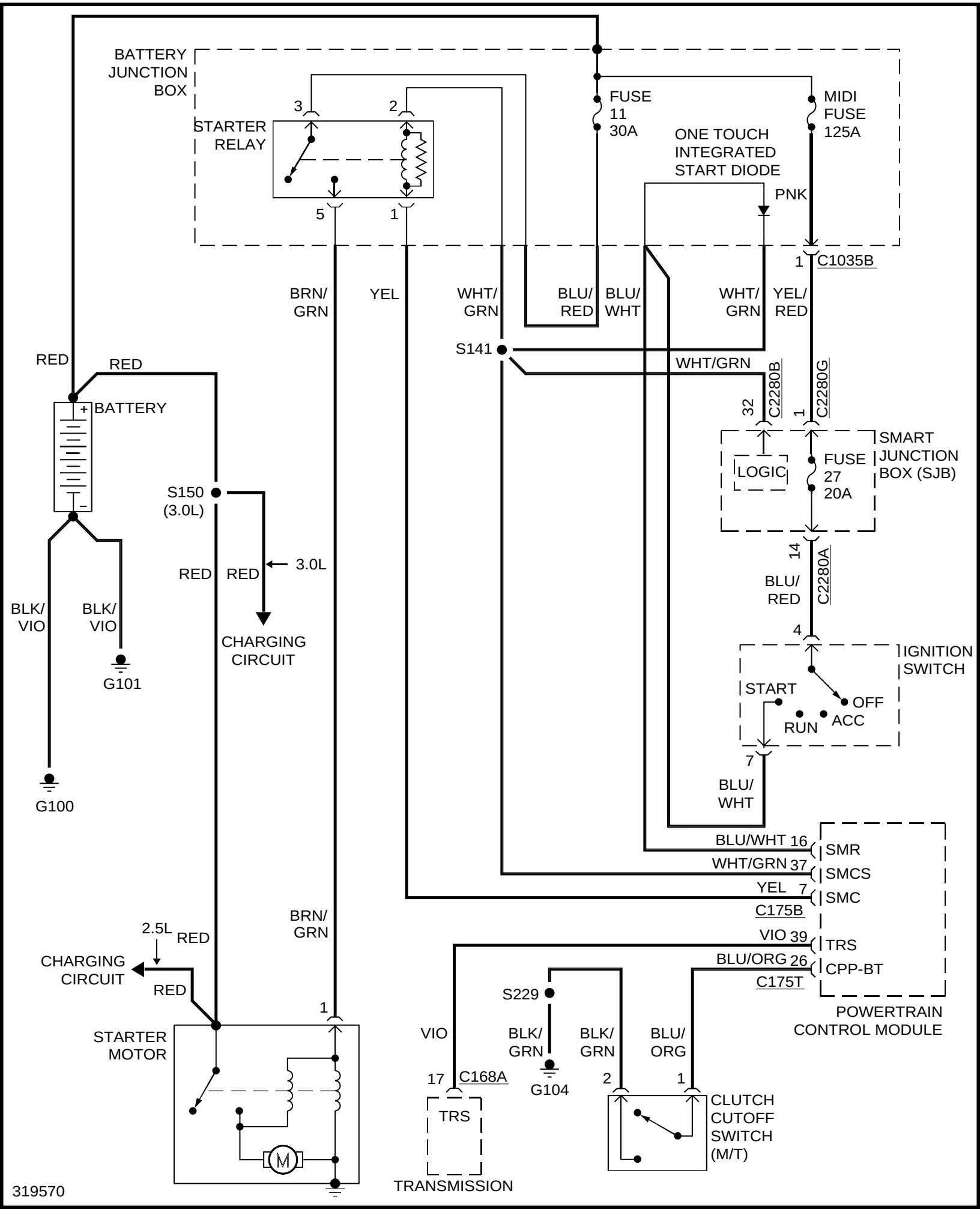
BATTERY JUNCTION BOX
STARTER RELAY
3
2
5
1
FUSE 11 30A
MIDI FUSE 125A
ONE TOUCH INTEGRATED START DIODE
PNK
1
C1035B
BRN/ GRN
YEL
WHT/ GRN
BLU/ RED
BLU/ WHT
WHT/ GRN
YEL/ RED
S141
WHT/GRN
RED
RED
BATTERY
+
-
32
C2280B
1
C2280G
SMART JUNCTION BOX (SJB)
LOGIC
FUSE 27 20A
S150 (3.0L)
RED
RED
3.0L
CHARGING CIRCUIT
14
C2280A
BLU/ RED
4
BLK/ VIO
BLK/ VIO
G101
IGNITION SWITCH
START
OFF
RUN
ACC
7
BLU/ WHT
G100
BLU/WHT 16
SMR
WHT/GRN 37
SMCS
YEL 7
SMC
C175B
BRN/ GRN
2.5L
RED
CHARGING CIRCUIT
RED
VIO 39
TRS
BLU/ORG 26
CPP-BT
C175T
POWERTRAIN CONTROL MODULE
S229
1
STARTER MOTOR
VIO
BLK/ GRN
BLK/ GRN
BLU/ ORG
17
C168A
G104
2
1
TRS
CLUTCH CUTOFF SWITCH (M/T)
TRANSMISSION
M
319570