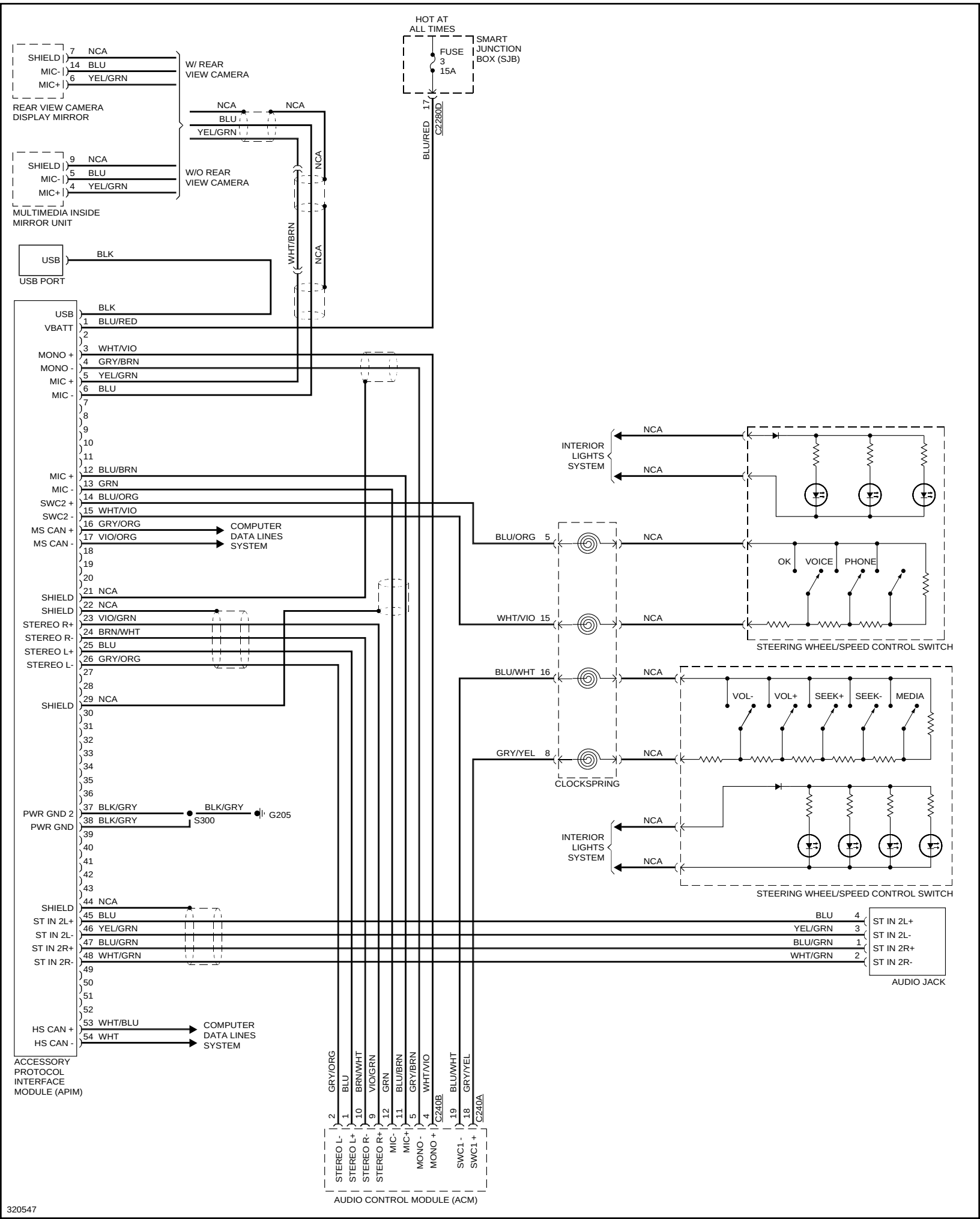
HOT AT ALL TIMES
FUSE 3 15A
SMART JUNCTION BOX (SJB)
BLU/RED 17 C2280D
REAR VIEW CAMERA DISPLAY MIRROR
SHIELD
MIC-
MIC+
7 NCA
14 BLU
6 YEL/GRN
W/ REAR VIEW CAMERA
NCA
BLU
YEL/GRN
MULTIMEDIA INSIDE MIRROR UNIT
9 NCA
5 BLU
4 YEL/GRN
W/O REAR VIEW CAMERA
WHT/BRN
USB
BLK
USB PORT
VBATT
1 BLU/RED
3 WHT/VIO
MONO +
MONO -
4 GRY/BRN
5 YEL/GRN
MIC +
MIC -
6 BLU
12 BLU/BRN
13 GRN
SWC2 +
SWC2 -
14 BLU/ORG
15 WHT/VIO
16 GRY/ORG
17 VIO/ORG
MS CAN +
MS CAN -
COMPUTER DATA LINES SYSTEM
21 NCA
22 NCA
STEREO R+
STEREO R-
STEREO L+
STEREO L-
23 VIO/GRN
24 BRN/WHT
25 BLU
26 GRY/ORG
29 NCA
PWR GND 2
PWR GND
37 BLK/GRY
38 BLK/GRY
S300
G205
44 NCA
ST IN 2L+
ST IN 2L-
ST IN 2R+
ST IN 2R-
45 BLU
46 YEL/GRN
47 BLU/GRN
48 WHT/GRN
53 WHT/BLU
54 WHT
HS CAN +
HS CAN -
ACCESSORY PROTOCOL INTERFACE MODULE (APIM)
INTERIOR LIGHTS SYSTEM
BLU/ORG 5
WHT/VIO 15
BLU/WHT 16
GRY/YEL 8
CLOCKSPRING
OK
VOICE
PHONE
VOL-
VOL+
SEEK+
SEEK-
MEDIA
STEERING WHEEL/SPEED CONTROL SWITCH
BLU 4
YEL/GRN 3
BLU/GRN 1
WHT/GRN 2
AUDIO JACK
GRY/ORG 2
BLU 1
BRN/WHT 10
VIO/GRN 9
GRN 12
BLU/BRN 11
GRY/BRN 5
WHT/VIO 4
C240B
BLU/WHT 19
GRY/YEL 18
C240A
STEREO L-
STEREO L+
STEREO R-
STEREO R+
MIC-
MIC+
MONO -
MONO +
SWC1 -
SWC1 +
AUDIO CONTROL MODULE (ACM)

320547