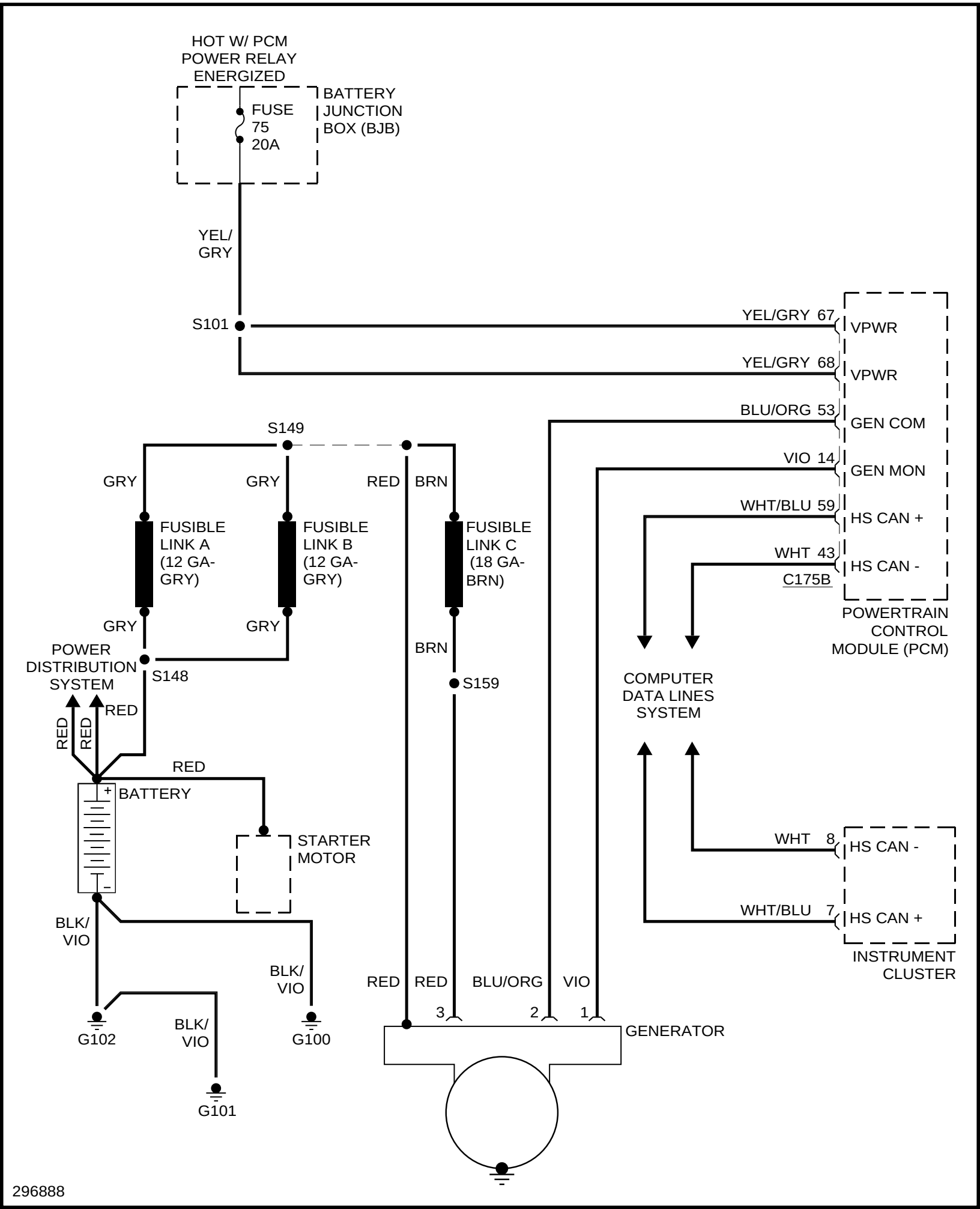
HOT W/ PCM
POWER RELAY
ENERGIZED
FUSE
75
20A
BATTERY
JUNCTION
BOX (BJB)
YEL/
GRY
S101
YEL/GRY 67
VPWR
YEL/GRY 68
VPWR
BLU/ORG 53
GEN COM
VIO 14
GEN MON
WHT/BLU 59
HS CAN +
WHT 43
HS CAN -
C175B
POWERTRAIN
CONTROL
MODULE (PCM)
S149
GRY
GRY
RED
BRN
FUSIBLE
LINK A
(12 GA-
GRY)
FUSIBLE
LINK B
(12 GA-
GRY)
FUSIBLE
LINK C
(18 GA-
BRN)
GRY
GRY
BRN
POWER
DISTRIBUTION
SYSTEM
S148
S159
COMPUTER
DATA LINES
SYSTEM
RED
RED
RED
RED
BATTERY
STARTER
MOTOR
WHT 8
HS CAN -
WHT/BLU 7
HS CAN +
INSTRUMENT
CLUSTER
BLK/
VIO
BLK/
VIO
RED
RED
BLU/ORG
VIO
3
2
1
GENERATOR
G102
BLK/
VIO
G100
G101
296888