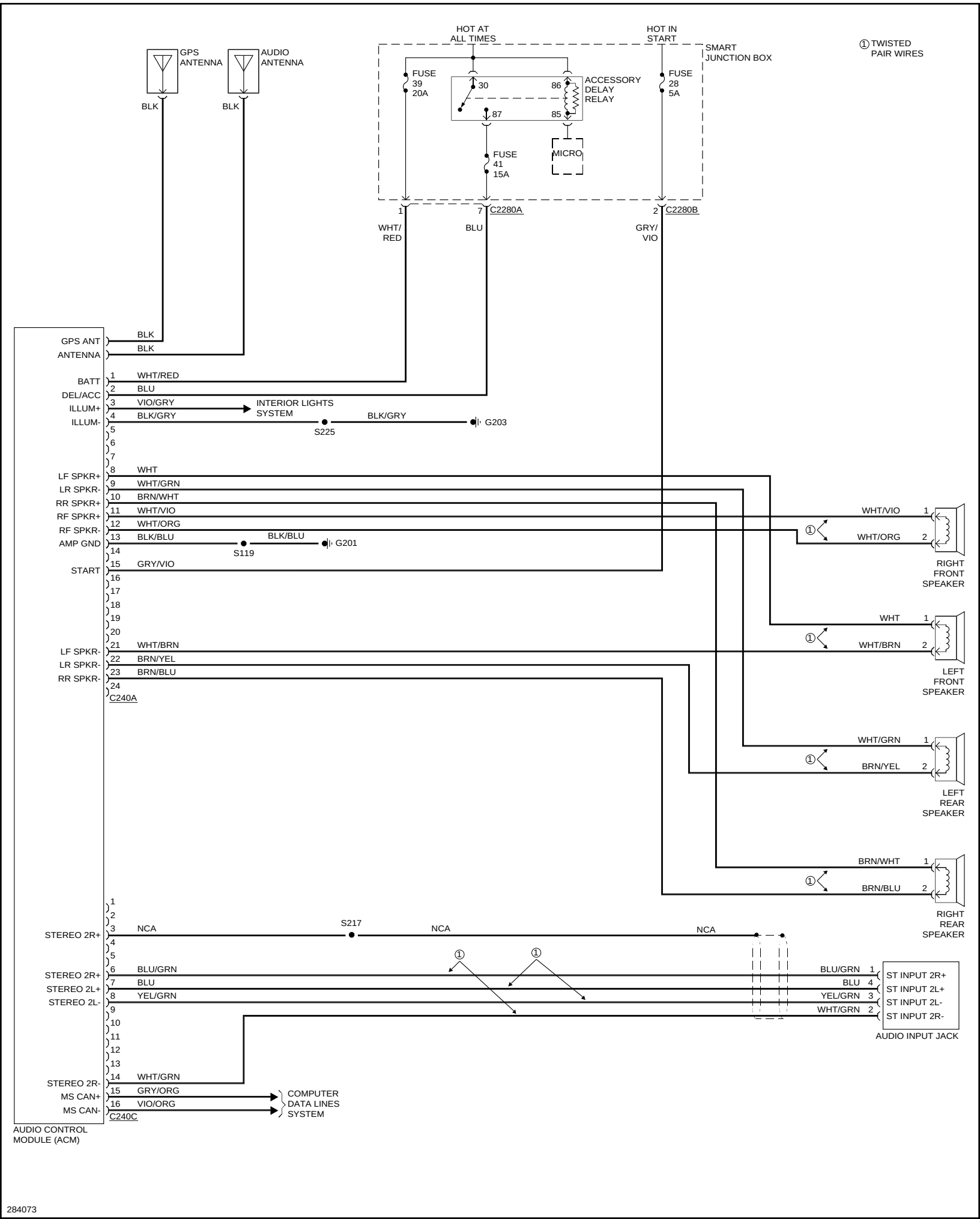
HOT AT ALL TIMES
HOT IN START
SMART JUNCTION BOX
① TWISTED PAIR WIRES
GPS ANTENNA
AUDIO ANTENNA
BLK
BLK
FUSE 39 20A
30
86
ACCESSORY DELAY RELAY
87
85
FUSE 28 5A
FUSE 41 15A
MICRO
1
7
C2280A
2
C2280B
WHT/ RED
BLU
GRY/ VIO
GPS ANT
ANTENNA
BLK
BLK
BATT
DEL/ACC
ILLUM+
ILLUM-
1 WHT/RED
2 BLU
3 VIO/GRY
4 BLK/GRY
INTERIOR LIGHTS SYSTEM
BLK/GRY
S225
G203
LF SPKR+
LR SPKR-
RR SPKR+
RF SPKR+
RF SPKR-
AMP GND
8 WHT
9 WHT/GRN
10 BRN/WHT
11 WHT/VIO
12 WHT/ORG
13 BLK/BLU
BLK/BLU
S119
G201
START
15 GRY/VIO
WHT/VIO
WHT/ORG
RIGHT FRONT SPEAKER
WHT
WHT/BRN
LEFT FRONT SPEAKER
LF SPKR-
LR SPKR-
RR SPKR-
21 WHT/BRN
22 BRN/YEL
23 BRN/BLU
C240A
WHT/GRN
BRN/YEL
LEFT REAR SPEAKER
BRN/WHT
BRN/BLU
RIGHT REAR SPEAKER
STEREO 2R+
3 NCA
S217
NCA
NCA
STEREO 2R+
STEREO 2L+
STEREO 2L-
6 BLU/GRN
7 BLU
8 YEL/GRN
BLU/GRN
BLU
YEL/GRN
WHT/GRN
ST INPUT 2R+
ST INPUT 2L+
ST INPUT 2L-
ST INPUT 2R-
AUDIO INPUT JACK
STEREO 2R-
MS CAN+
MS CAN-
14 WHT/GRN
15 GRY/ORG
16 VIO/ORG
COMPUTER DATA LINES SYSTEM
C240C
AUDIO CONTROL MODULE (ACM)

284073