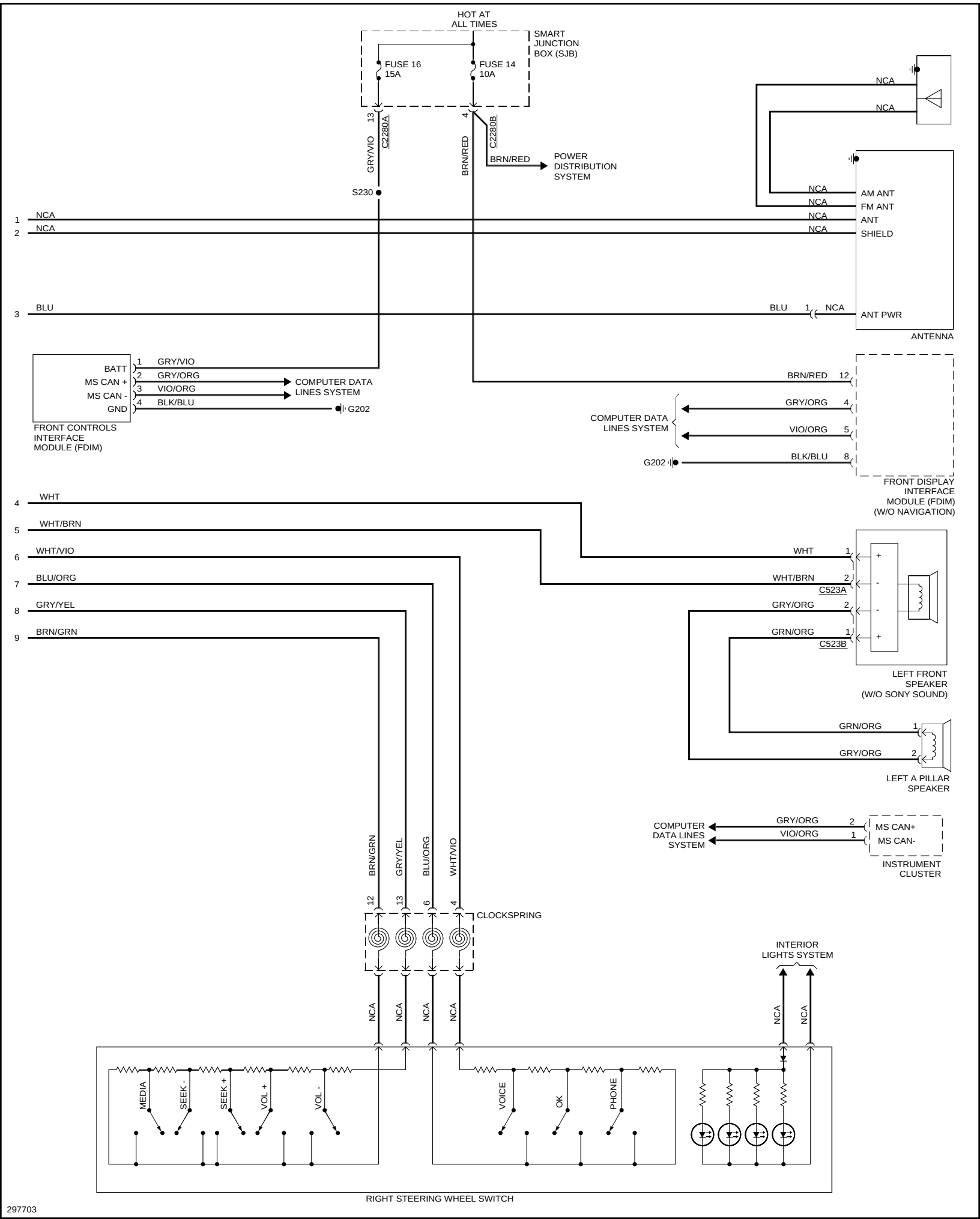
HOT AT ALL TIMES
SMART JUNCTION BOX (SJB)
FUSE 16 15A
FUSE 14 10A
13
C2280A
GRY/VIO
4
C2280B
BRN/RED
BRN/RED
POWER DISTRIBUTION SYSTEM
S230
NCA
NCA
NCA
NCA
NCA
NCA
AM ANT
FM ANT
ANT
SHIELD
1 NCA
2 NCA
3 BLU
BLU 1 NCA
ANT PWR
ANTENNA
BATT
MS CAN +
MS CAN -
GND
1 GRY/VIO
2 GRY/ORG
3 VIO/ORG
4 BLK/BLU
COMPUTER DATA LINES SYSTEM
G202
FRONT CONTROLS INTERFACE MODULE (FDIM)
BRN/RED 12
GRY/ORG 4
VIO/ORG 5
BLK/BLU 8
COMPUTER DATA LINES SYSTEM
G202
FRONT DISPLAY INTERFACE MODULE (FDIM) (W/O NAVIGATION)
4 WHT
5 WHT/BRN
6 WHT/VIO
7 BLU/ORG
8 GRY/YEL
9 BRN/GRN
WHT 1
WHT/BRN 2
C523A
GRY/ORG 2
GRN/ORG 1
C523B
LEFT FRONT SPEAKER (W/O SONY SOUND)
GRN/ORG 1
GRY/ORG 2
LEFT A PILLAR SPEAKER
COMPUTER DATA LINES SYSTEM
GRY/ORG 2
VIO/ORG 1
MS CAN+
MS CAN-
INSTRUMENT CLUSTER
BRN/GRN
GRY/YEL
BLU/ORG
WHT/VIO
12
13
6
4
CLOCKSPRING
INTERIOR LIGHTS SYSTEM
NCA
NCA
NCA
NCA
NCA
NCA
MEDIA
SEEK -
SEEK +
VOL +
VOL -
VOICE
OK
PHONE
RIGHT STEERING WHEEL SWITCH

297703