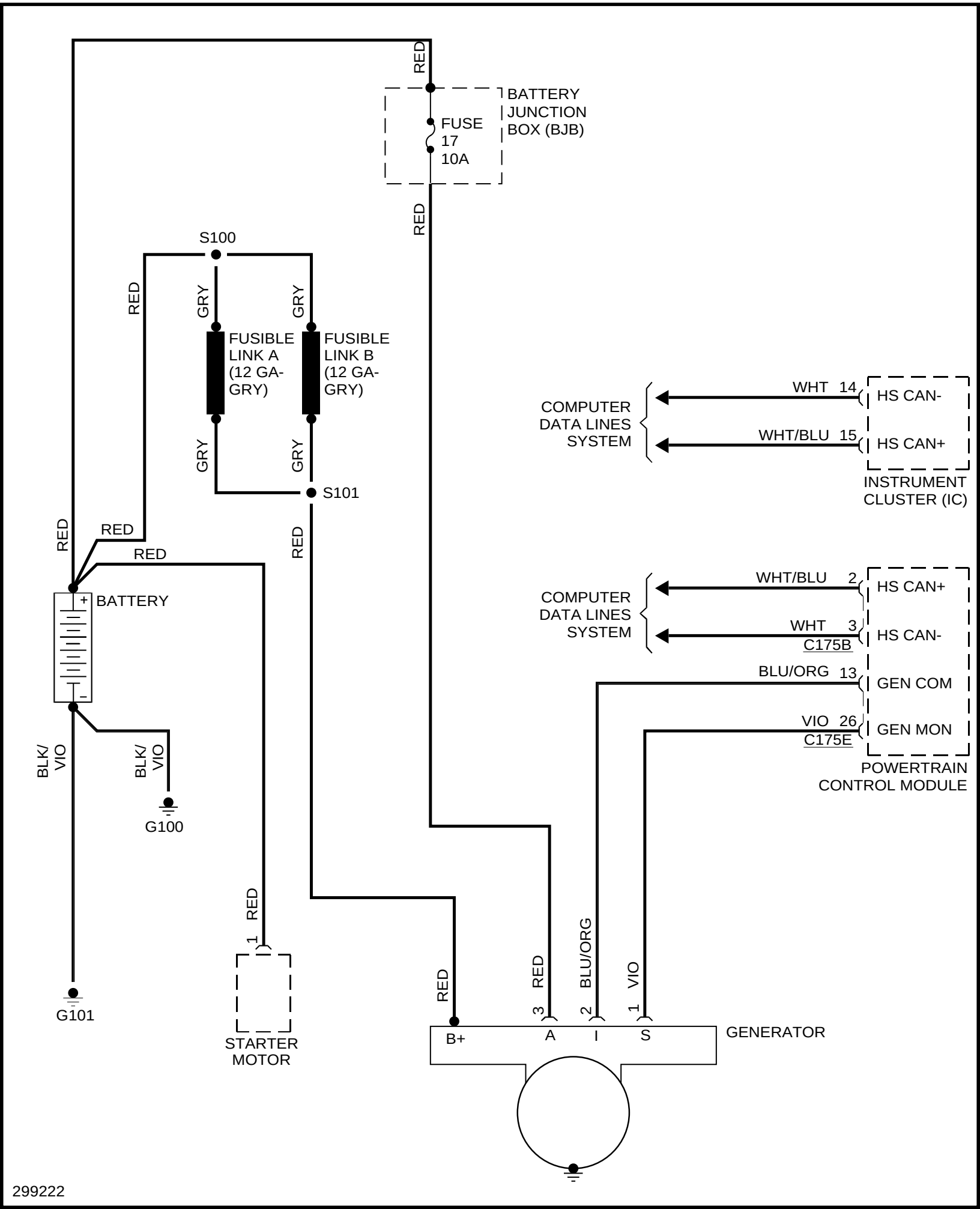
RED
BATTERY JUNCTION BOX (BJB)
FUSE 17 10A
RED
S100
RED
GRY
GRY
FUSIBLE LINK A (12 GA-GRY)
FUSIBLE LINK B (12 GA-GRY)
GRY
GRY
S101
RED
RED
RED
RED
BATTERY
+
-
BLK/VIO
BLK/VIO
G100
G101
RED
1
STARTER MOTOR
COMPUTER DATA LINES SYSTEM
WHT 14
WHT/BLU 15
HS CAN-
HS CAN+
INSTRUMENT CLUSTER (IC)
COMPUTER DATA LINES SYSTEM
WHT/BLU 2
WHT 3
C175B
HS CAN+
HS CAN-
BLU/ORG 13
VIO 26
C175E
GEN COM
GEN MON
POWERTRAIN CONTROL MODULE
RED
3 RED
2 BLU/ORG
1 VIO
B+
A
I
S
GENERATOR
299222