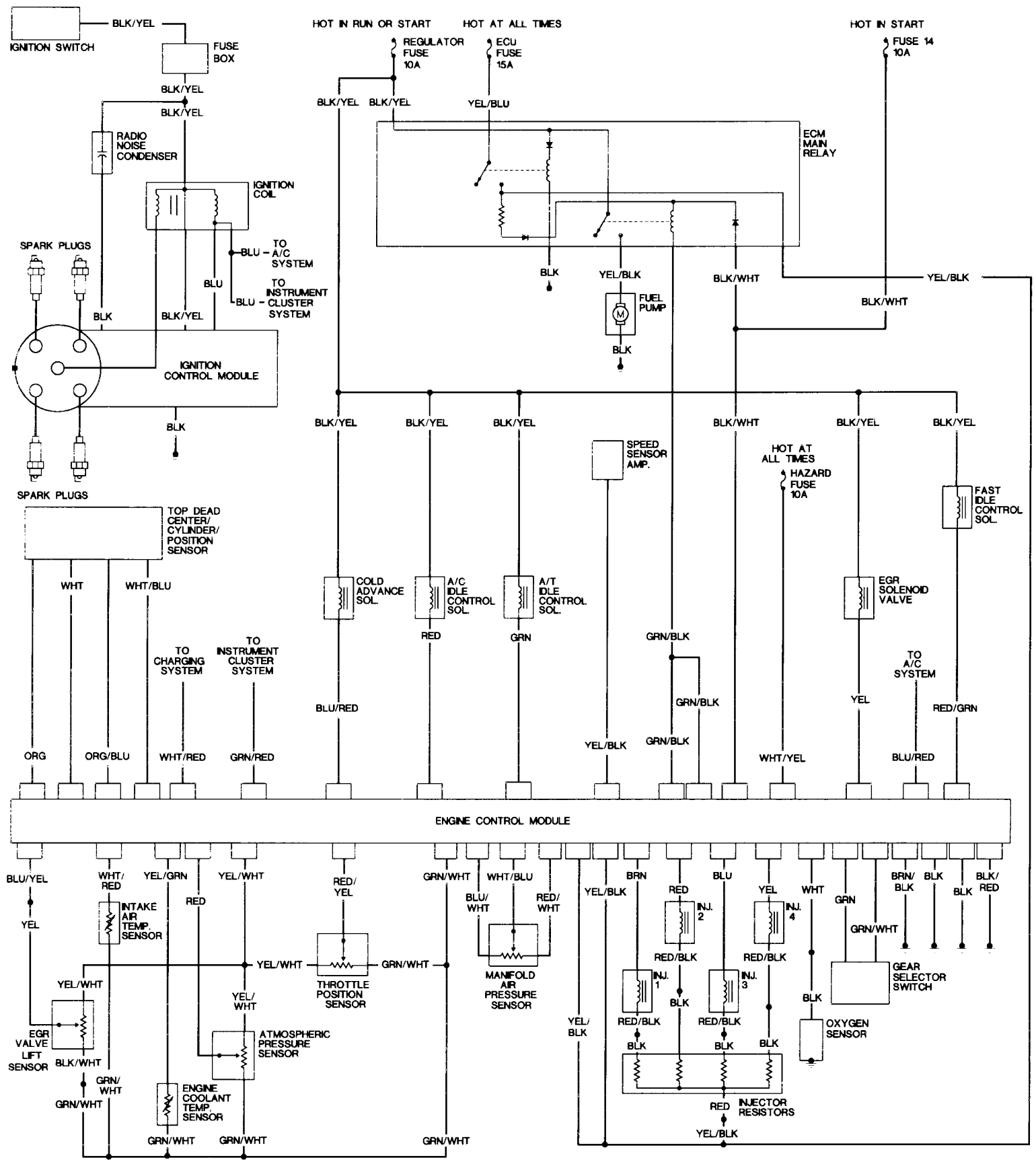
IGNITION SWITCH
BLK/YEL
FUSE BOX
BLK/YEL
BLK/YEL
RADIO NOISE CONDENSER
IGNITION COIL
SPARK PLUGS
BLU - TO A/C SYSTEM
BLU
BLU - TO INSTRUMENT CLUSTER SYSTEM
BLK
BLK/YEL
IGNITION CONTROL MODULE
BLK
SPARK PLUGS
HOT IN RUN OR START
HOT AT ALL TIMES
HOT IN START
REGULATOR FUSE 10A
ECU FUSE 15A
FUSE 14 10A
BLK/YEL
BLK/YEL
YEL/BLU
ECM MAIN RELAY
BLK
YEL/BLK
BLK/WHT
YEL/BLK
FUEL PUMP
BLK
BLK/WHT
BLK/YEL
BLK/YEL
BLK/YEL
BLK/WHT
BLK/YEL
BLK/YEL
SPEED SENSOR AMP.
HOT AT ALL TIMES
HAZARD FUSE 10A
FAST IDLE CONTROL SOL.
TOP DEAD CENTER/ CYLINDER/ POSITION SENSOR
WHT
WHT/BLU
COLD ADVANCE SOL.
A/C IDLE CONTROL SOL.
A/T IDLE CONTROL SOL.
EGR SOLENOID VALVE
RED
GRN
GRN/BLK
TO CHARGING SYSTEM
TO INSTRUMENT CLUSTER SYSTEM
TO A/C SYSTEM
BLU/RED
GRN/BLK
YEL
RED/GRN
YEL/BLK
GRN/BLK
ORG
ORG/BLU
WHT/RED
GRN/RED
WHT/YEL
BLU/RED
ENGINE CONTROL MODULE
BLU/YEL
WHT/ RED
YEL/GRN
YEL/WHT
RED/ YEL
GRN/WHT
WHT/BLU
YEL/BLK
BRN
RED
BLU
YEL
WHT
GRN
BRN/ BLK
BLK
BLK
BLK/ RED
YEL
INTAKE AIR TEMP. SENSOR
RED
BLU/ WHT
RED/ WHT
INJ. 2
INJ. 4
GRN/WHT
YEL/WHT
GRN/WHT
THROTTLE POSITION SENSOR
MANIFOLD AIR PRESSURE SENSOR
RED/BLK
RED/BLK
GEAR SELECTOR SWITCH
YEL/WHT
INJ. 1
BLK
INJ. 3
BLK
YEL/ WHT
EGR VALVE LIFT SENSOR
ATMOSPHERIC PRESSURE SENSOR
RED/BLK
RED/BLK
OXYGEN SENSOR
YEL/ BLK
BLK/WHT
BLK
BLK
BLK
GRN/ WHT
GRN/WHT
ENGINE COOLANT TEMP. SENSOR
RED
INJECTOR RESISTORS
YEL/BLK
GRN/WHT
GRN/WHT
GRN/WHT