4 CYLINDER

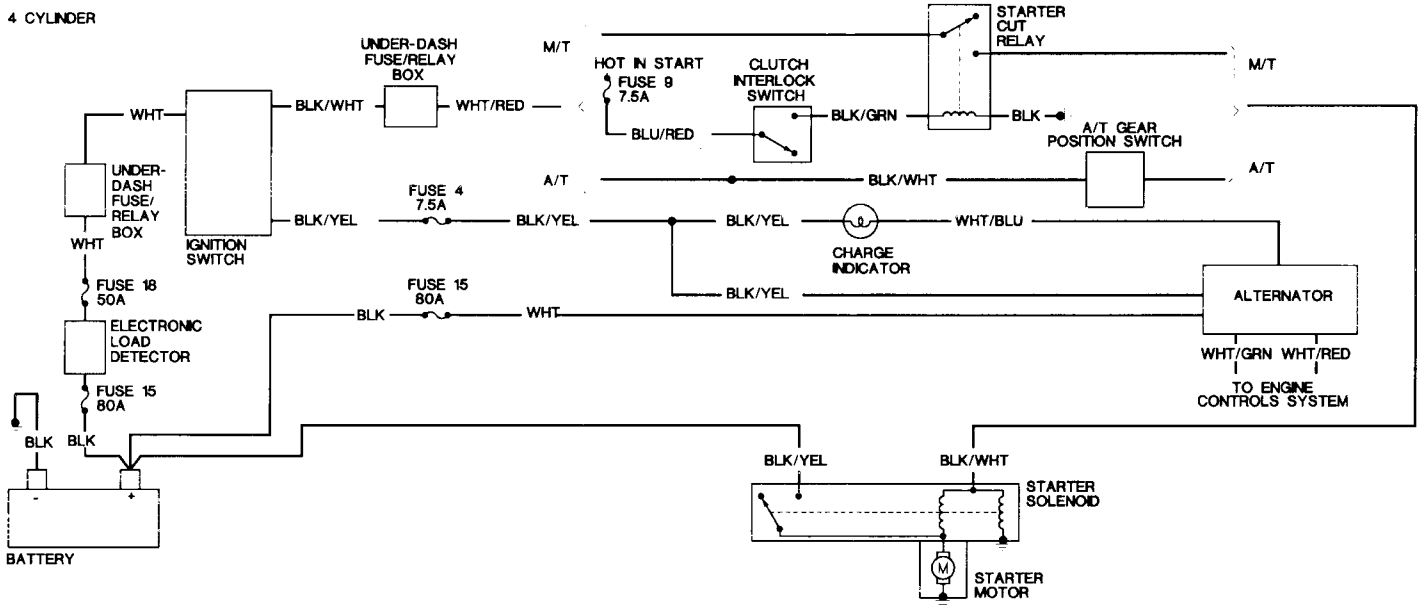
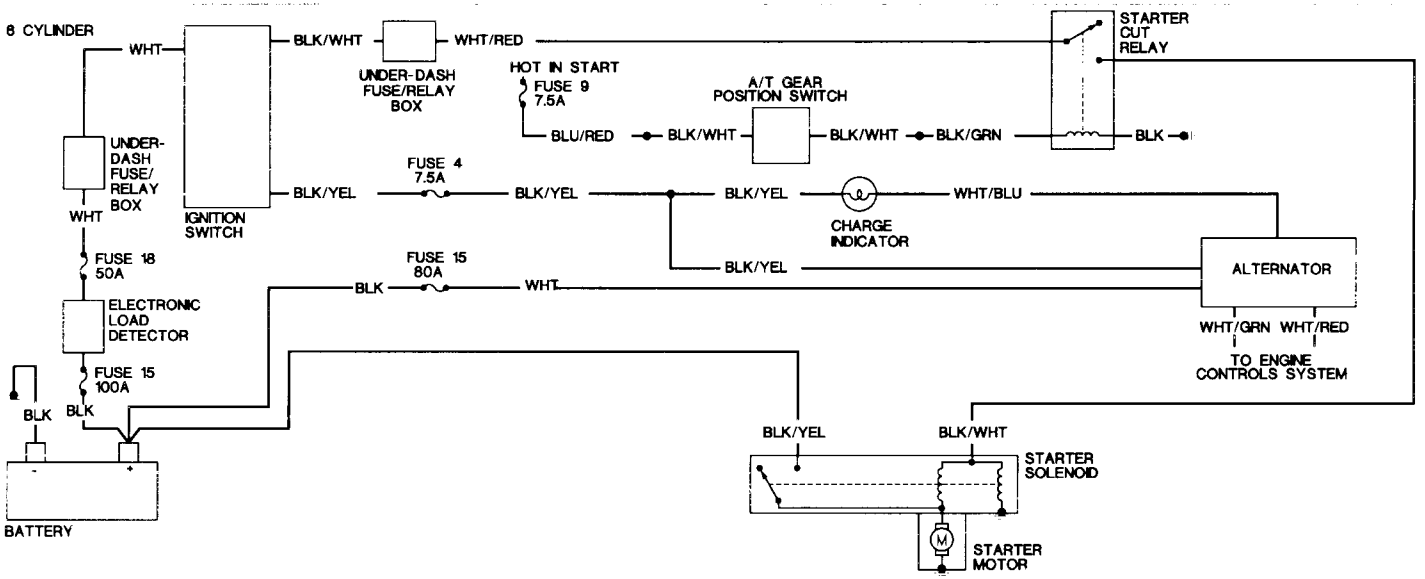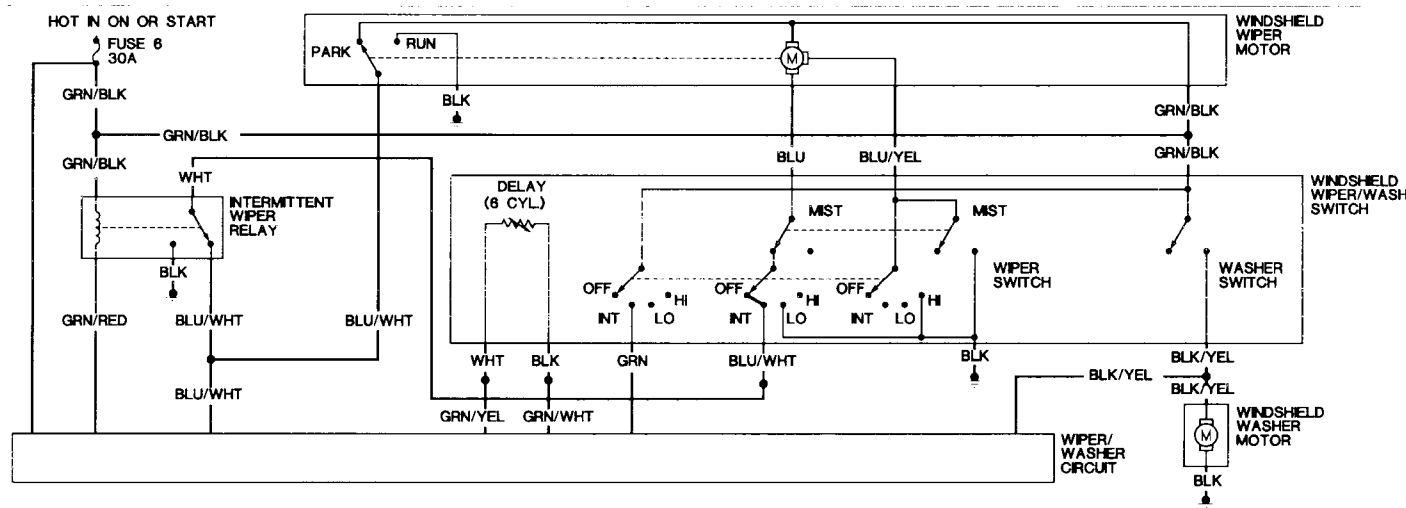
6 CYLINDER