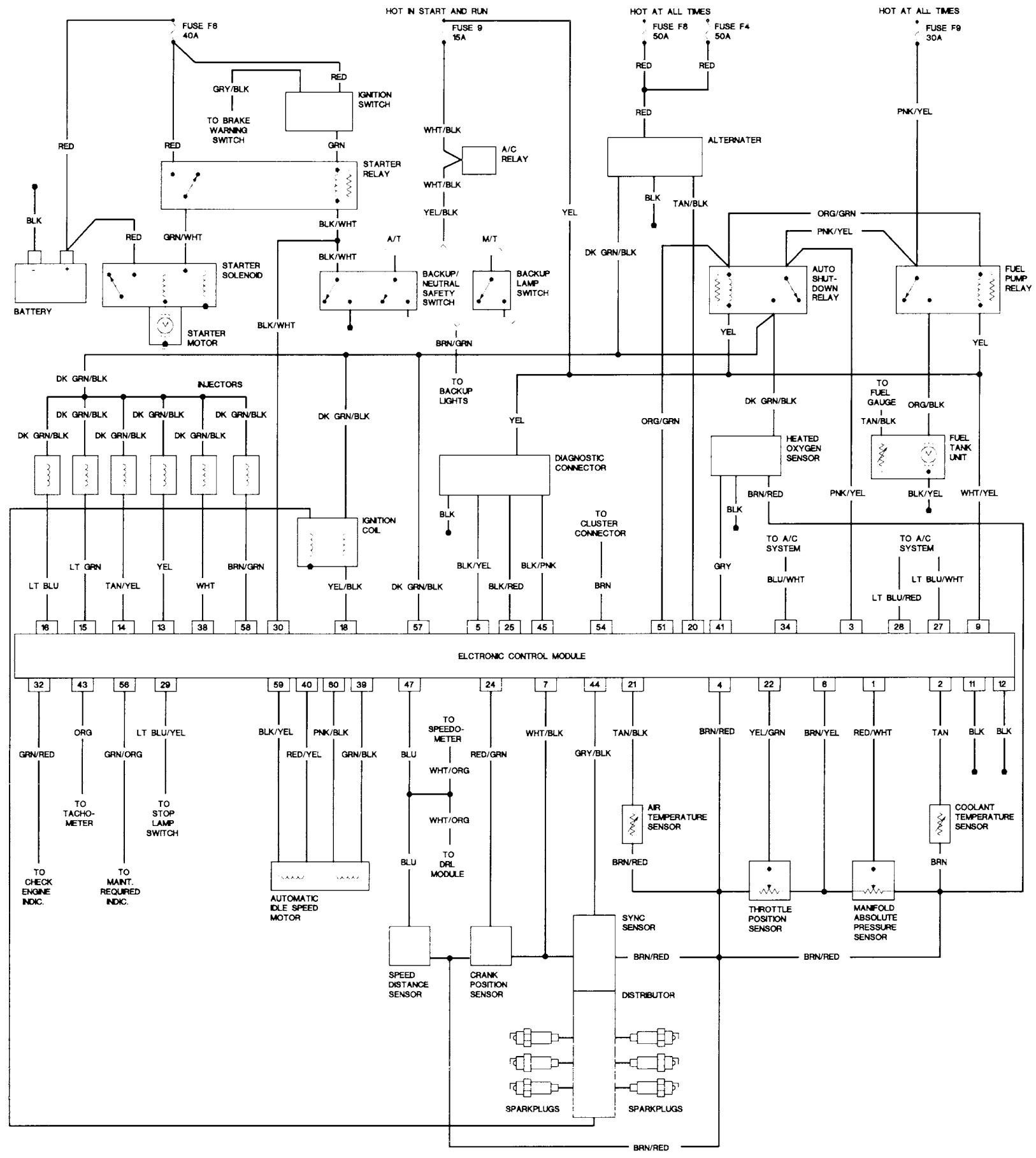
HOT IN START AND RUN
HOT AT ALL TIMES
HOT AT ALL TIMES
FUSE F6 40A
FUSE 9 15A
FUSE F8 50A
FUSE F4 50A
FUSE F9 30A
RED
GRY/BLK
IGNITION SWITCH
TO BRAKE WARNING SWITCH
GRN
STARTER RELAY
WHT/BLK
A/C RELAY
YEL/BLK
ALTERNATER
BLK
TAN/BLK
PNK/YEL
ORG/GRN
PNK/YEL
YEL
DK GRN/BLK
BLK/WHT
GRN/WHT
STARTER SOLENOID
BATTERY
STARTER MOTOR
A/T
M/T
BACKUP/ NEUTRAL SAFETY SWITCH
BACKUP LAMP SWITCH
AUTO SHUT-DOWN RELAY
FUEL PUMP RELAY
BRN/GRN
TO BACKUP LIGHTS
INJECTORS
DK GRN/BLK
TO FUEL GAUGE
ORG/BLK
TAN/BLK
HEATED OXYGEN SENSOR
FUEL TANK UNIT
DIAGNOSTIC CONNECTOR
BRN/RED
BLK/YEL
WHT/YEL
IGNITION COIL
TO CLUSTER CONNECTOR
TO A/C SYSTEM
LT GRN
LT BLU
TAN/YEL
WHT
BRN/GRN
YEL/BLK
BLK/YEL
BLK/PNK
BLK/RED
BRN
GRY
BLU/WHT
LT BLU/WHT
LT BLU/RED
16
15
14
13
38
58
30
18
57
5
25
45
54
51
20
41
34
3
28
27
9
ELCTRONIC CONTROL MODULE
32
43
56
29
59
40
60
39
47
24
7
44
21
4
22
6
1
2
11
12
GRN/RED
ORG
GRN/ORG
LT BLU/YEL
BLK/YEL
PNK/BLK
RED/YEL
GRN/BLK
BLU
TO SPEEDO-METER
WHT/ORG
RED/GRN
WHT/BLK
GRY/BLK
TAN/BLK
BRN/RED
YEL/GRN
BRN/YEL
RED/WHT
TAN
BLK
TO TACHO-METER
TO STOP LAMP SWITCH
TO DRL MODULE
AIR TEMPERATURE SENSOR
COOLANT TEMPERATURE SENSOR
TO CHECK ENGINE INDIC.
TO MAINT. REQUIRED INDIC.
AUTOMATIC IDLE SPEED MOTOR
THROTTLE POSITION SENSOR
MANIFOLD ABSOLUTE PRESSURE SENSOR
SYNC SENSOR
SPEED DISTANCE SENSOR
CRANK POSITION SENSOR
DISTRIBUTOR
SPARKPLUGS
SPARKPLUGS